PVSITES TRAINING SESSIONS

DEMOS OVERVIEW

STAMBUGES, 26TH NOVEMBER 2019

Jorge Escribano Troncoso
ACCIONA

This project has received funding from the European Union's Horizon 2020 research and innovation programme under grant agreement Nº 691768

PVSITES DEMO-SITES

PVSITES DEMO-SITES

DEMO 1: FormatD2

SINGLE FAMILY HOUSE

Solar roof …… to be detailed after

PVSITES DEMO-SITES

DEMO 2: EHG

Educational building

BIPV solar ventilated facades

DEMO 2: EHG

Educational building

Building description

Location	Geneva (Switzerland)
Typology	Educational building
Buildings	Pavilion 1 & Pavilion 2
Floors	2

Characteristics

The *École Hôtelière de Genève* (EHG) is a complex of buildings including not only the school facilities but also a hotel for the students hosting.

Area available for BIPV

Two brick masonry facades of two different modern pavilions, available to integrate BIPV: east facade of the Pavilion 1 (31.6 m^2), which has two windows rows at the edges and a central curtain wall; and west facade of the Pavilion 2 (78.4 m^2), which has two centered vertical windows rows.
Orientation: -80° (E) / +100° (W).
Inclination: 90° / 90°.

DEMO 2: EHG

BIPV ventilated facade panels by FLISOM

PVSITES prototypes

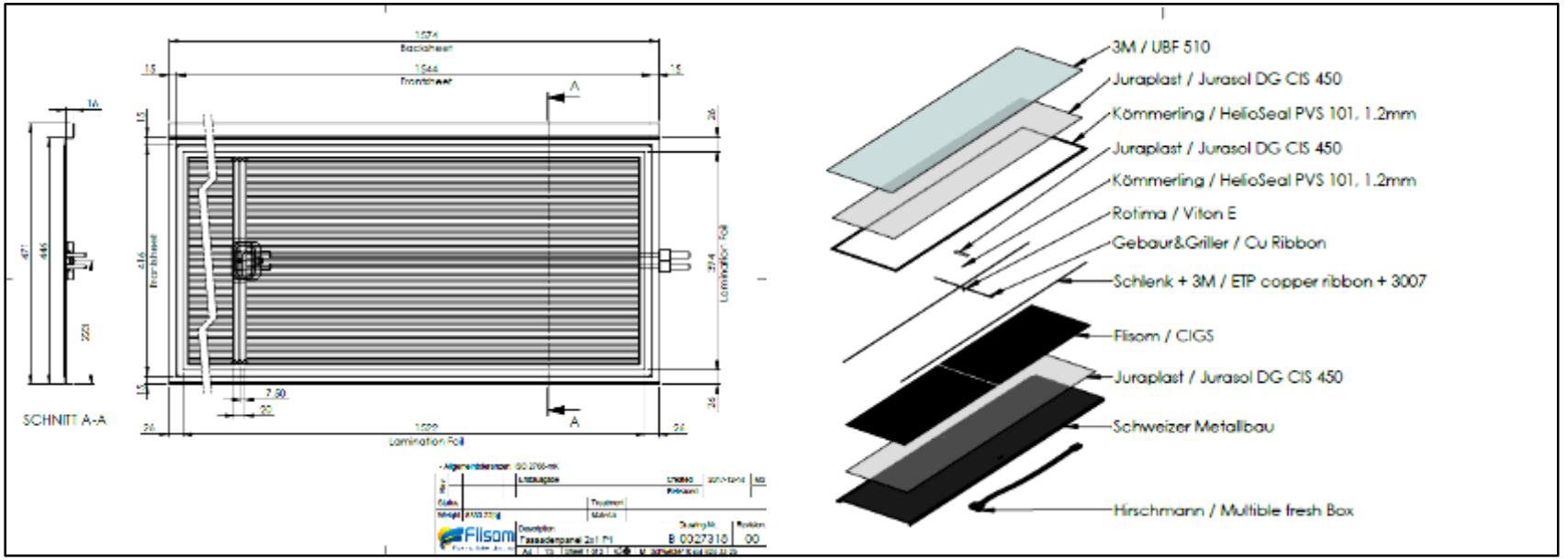

Facade Panel 2x1 P1 & P2 by FLISOM

Semi-flexible and lightweight solar panel, based on CIGS photovoltaic technology laminated on a black aluminium backsheet. Easy installation thanks to the bent borders, which provide stiffness and facilitate its assembly. Thickness, colour, junction box and other features customized for the intended application.

Two different models have been manufactured for being installed in EHG demo-site.

DEMO 2: EHG

PV system 9.0 kWp

PV system description

Solar field		
System power	9.0	kWp
Orient // Inclin	-80°/100°//90°	(º)
Occupied area	110	m^2
No. modules	42+104=146	units
PV module		
Module power	61.6	Wp
Dimensions	471/492x1574	mm
Production		
Specific production	507	kWh/kWp/ year
Estimated production	4563	kWh/year

Operation mode

Two commercial solar inverters are used for the power conditioning, one per facade, and connected to the grid. Electrical configuration for EHG demo-site:

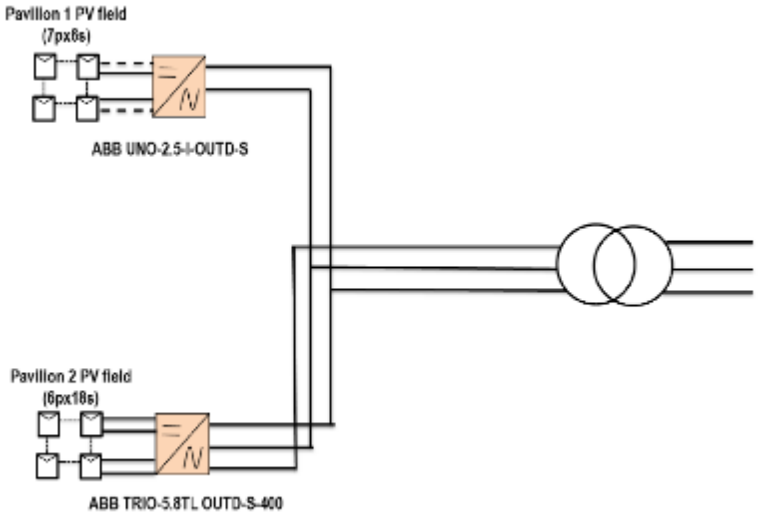

DEMO 2: EHG

BIPV solar ventilated facade

Building integration design

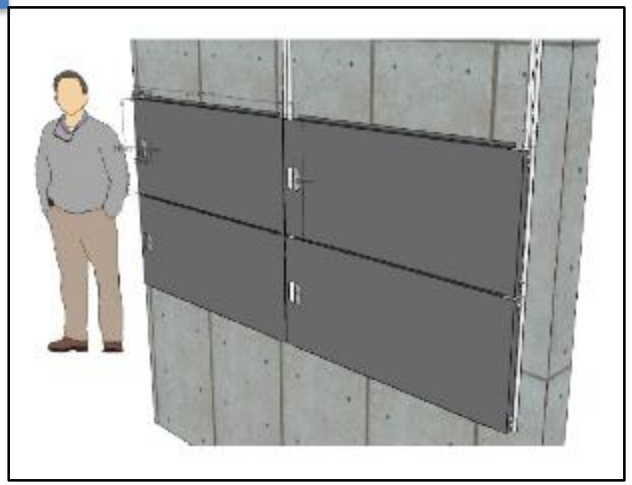

Building integration design

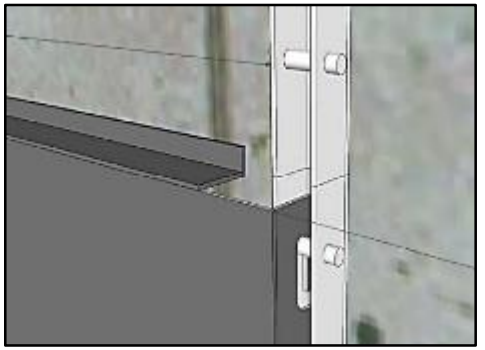

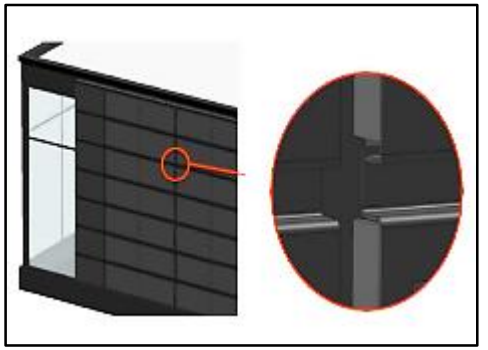

DEMO 2: EHG

BIPV solar ventilated facade

Building installation process

Installation process

- Installation works currently in process.
- Rails are mounted first.
- Screws between the bricks (no damage to the façade).
- Panels are mounted bottom up.
- Stringed together upwards.
- Inverter is on the roof.
- Protection foil is removed as last step.

DEMO 2: EHG

BIPV solar ventilated facade

Building installation result

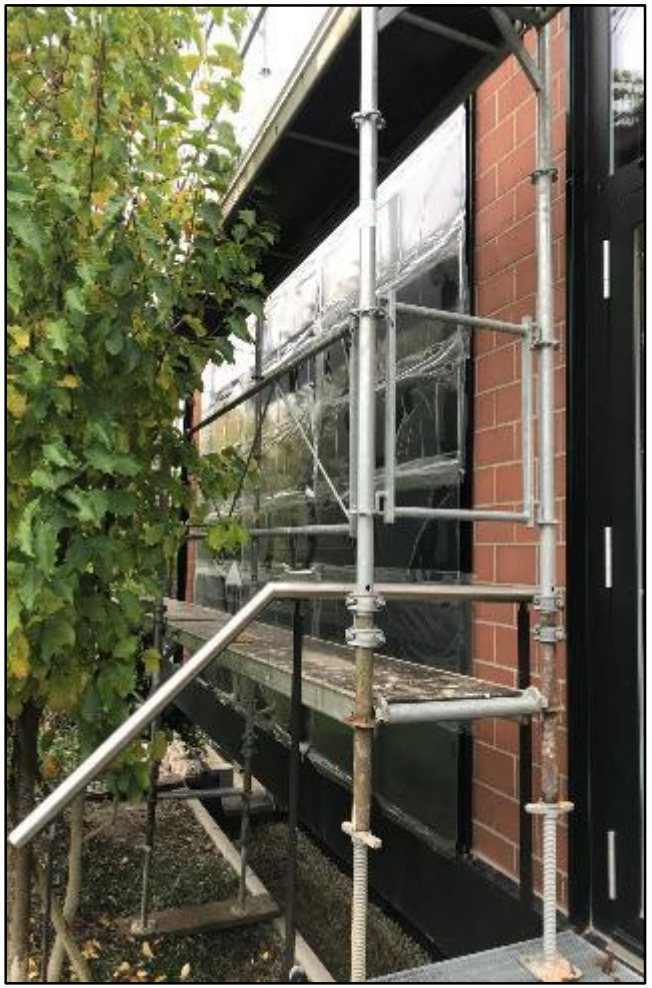

DEMO 2: EHG

BIPV solar ventilated facade

Building installation result

DEMO 2: EHG

EHG BIPV solar ventilated facade

Permitting & Commissioning

- The construction allowance was achieved after a long and difficult process. Finally, a 5 years limited permission was got.
- The intensive negotiation with the buildings property allowed a final agreement regarding the demonstration nature and scope and the installation timings and conditions.
- Some issues came to be more relevant than expected, causing some delays in the construction works: presence of trees impeding the access to the building facades, closing of the buildings area during summer holidays, avoiding of noises during the installation works, etc. Nevertheless, all of them was solved.

DEMO 2: EHG

Flisom BIPV ventilated Facade

Lessons learnt

- Language barrier is significant, even within the country. Many participants do not speak English or German.
- Handling, packing and protection of Elox Aluminum is tricky. We needed to develop a lot around it.
- It is a big plus to work with a partner in the same county, only 30 min away. Coordination, communicating is easy and fast.
- Getting construction permit without local support is very difficult. We had to hire a consultant.

PVSITES DEMO-SITES

DEMO 3: EMPA & EKZ

PARKING CARPORTS

PV solar carports

DEMO 3: EMPA & EKZ

Parking carports

Building description

Location	Dübendorf (Switzerland)
Typology	Parking carports
Area	98 m^2 / 103 m^2
Capacity	6 parking spots

Characteristics
Carports located at EMPA and EKZ facilities, with 6 parking spots each, providing energy to charge cars or to contribute to the building power supply.

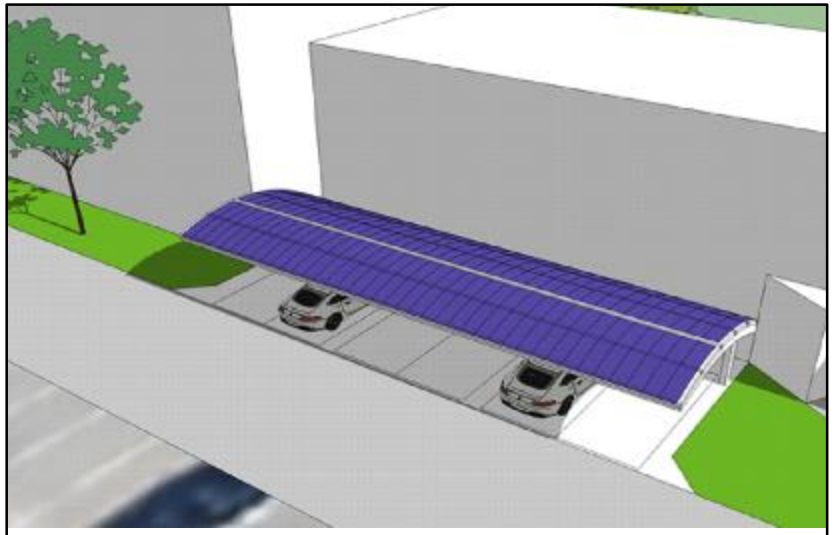

EMPA: Swiss Federal Laboratories for Materials Science.

EKZ: regional electrical provider.

DEMO 3: EMPA & EKZ

Carport Module “Model 3x1” & “Model 4x1” by FLISOM

PVSITES prototypes

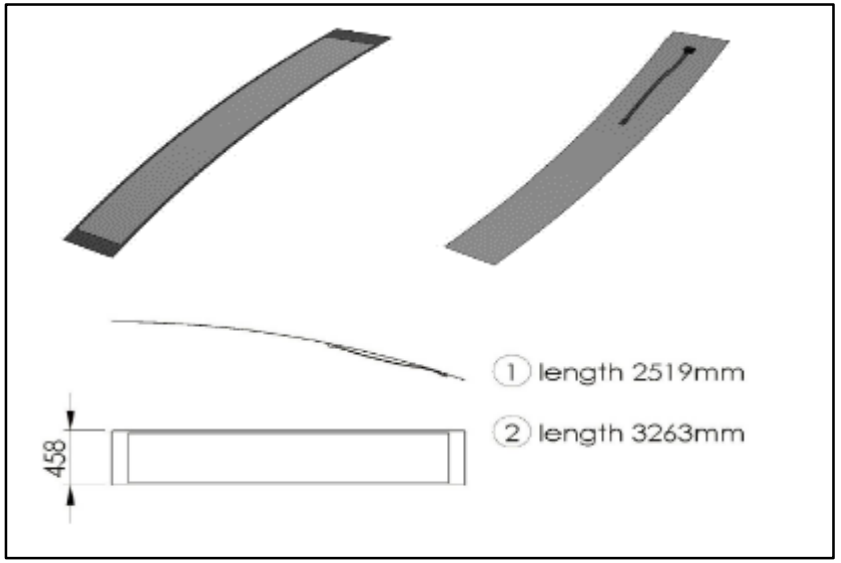

PRODUCT by MANUFACTURER

CIGS photovoltaic modules laminated on a thin steel back sheet, customized and manufactured by FLISOM for being integrated in the specific design of carports, also developed by FLISOM. Flexibility of modules allows them to adopt the curved shape of the carport roof. The use of two modules per row improves the energy performance of the system, reducing the adverse effect of the multiplicity of sun rays' incidence angles on the PV carport's curved surface.

DEMO 3: EMPA & EKZ

PV systems 7.8 kWp (EMPA) & 8.2 kWp (EKZ)

PV system description

Solar field (EMPA / EKZ)		
System power	7.2 / 7.6	kWp
Orient // Inclin	Several	(º)
Occupied area	98 / 103	m^2
No. modules	74 / 78	units
PV module (Model 1 / Model 2)		
Module power	85 / 110	Wp
Dimensions	2519 / 3263 x 458	mm
Production		
Specific production	943 / 943	kWh/kWp/ year
Estimated production	6789 / 7167	kWh/year

Operation mode

A “SolarEdge SE 9 kW” inverter with “P300 MPP trackers” are used. Power generated will be used to cover demand of Electric Vehicle (EV) charging stations. An energy storage system (batteries) are also used in EMPA’s carport. Electrical configuration for EMPA carport:

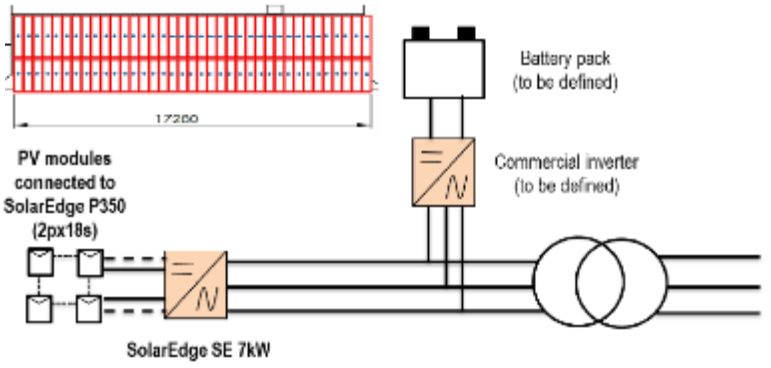

DEMO 3: EMPA & EKZ

PV carports

Integration design

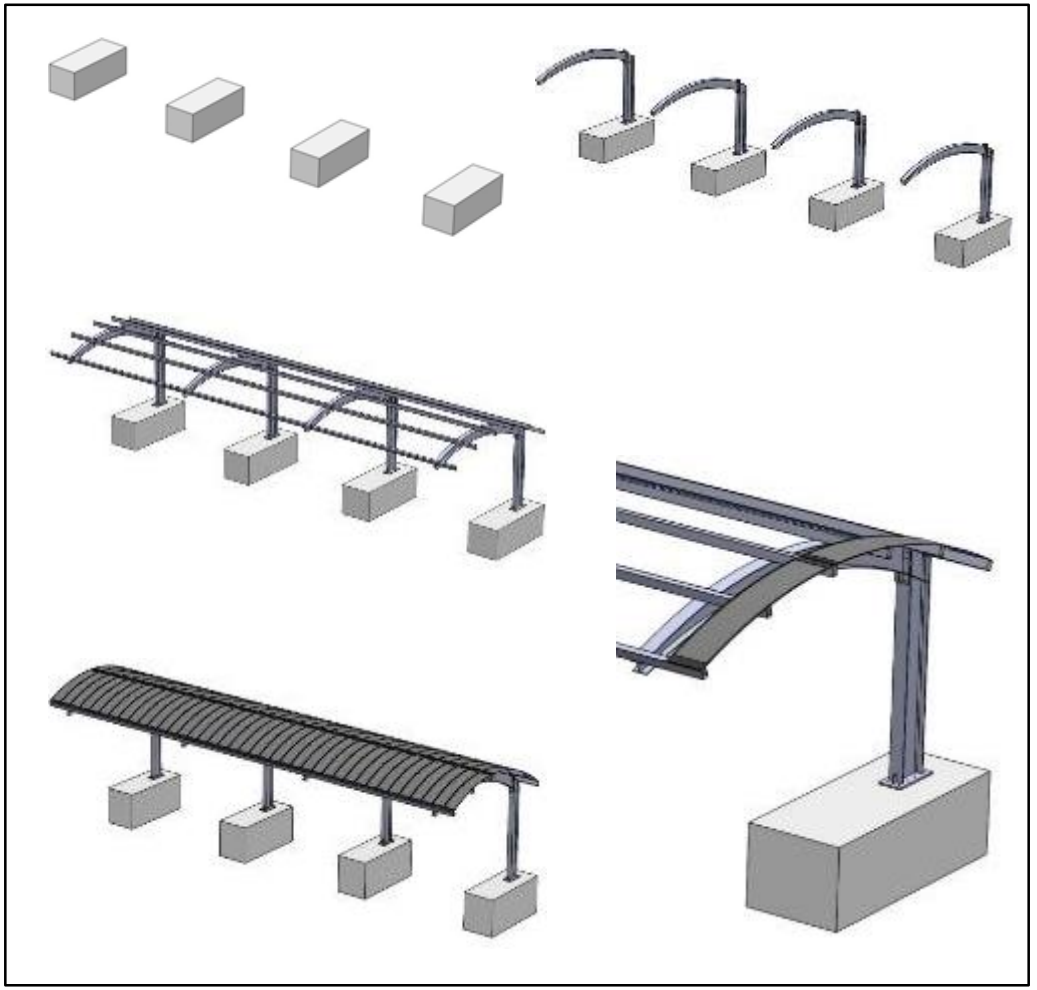

Building integration design

- PV modules integrated in an urban furniture element, as a carport, providing not only energy but also protection against rain, hail, snow, frost and the direct sun rays. The PV modules will totally cover the complete carports.
- Solar carport components include: foundation, vertical pillars and stiffening profiles, where the PV modules are installed.
- PV modules of two sizes have been used in order to totally cover the curved surface.

DEMO 3: EMPA & EKZ

PV carports

Installation process

Installation process

- Foundations execution and cables tubes installation.
- Construction of the metal structure: vertical pillars and stiffening profiles.
- Installation and connection of PV modules and MPP trackers.
- Connection to the EV charging station or to the building grid.
- System commissioning.

DEMO 3: EMPA & EKZ

PV carports (EMPA)

Installation result

DEMO 3: EMPA & EKZ

PV carports (EKZ)

Installation result

DEMO 3: EMPA & EKZ

EMPA & EKZ PV carports

Permitting & Commissioning

- EMPA carport: as the carport is on the EMPA campus and not close to a public road or private households, there were no objections from the municipality. Thus, permission was given within 4 weeks with no delay.
- EKZ carport: the first permit requested was denied by the municipality because the system is close to the road. After demonstrating that the place is preferable due to a better irradiation and further back on the parking there is shadowing, permission was finally got.
- EMPA solar carport has been integrated in the sophisticated Energy Management System (EMS) of the building (EMPA EnergyHub).
- EKZ solar carport has been directly connected to the EV charging station.

DEMO 3: EMPA & EKZ

Flisom BIPV carport

Lessons learnt

- Big plus to have construction and electrical installation from one company.
- The huge size of the panel (5 m) is difficult to handle. Always 2 people needed in production at every step.

PVSITES DEMO-SITES

DEMO 4: CRICURSA

INDUSTRIAL BUILDING

BIPV industrial roof system

DEMO 4: CRICURSA

Industrial building

Building description

Location	Granollers (Spain)
Typology	Industrial building
Area	13635 m^2 (built area)
Floors	2

Characteristics
Industrial and office buildings dedicated to the manufacturing of glass. One of the industrial buildings has recently been constructed.

Area available for BIPV
The new industrial building (blue in the picture) is roofed by metal sheet. An effective BIPV implementation, in the south slope, would be possible. The available area is 530 m2 .
Orientation: +2° (S).
Inclination: 6°.

DEMO 4: CRICURSA

Roof module by FLISOM & Solar inverter by CEA

PVSITES prototypes

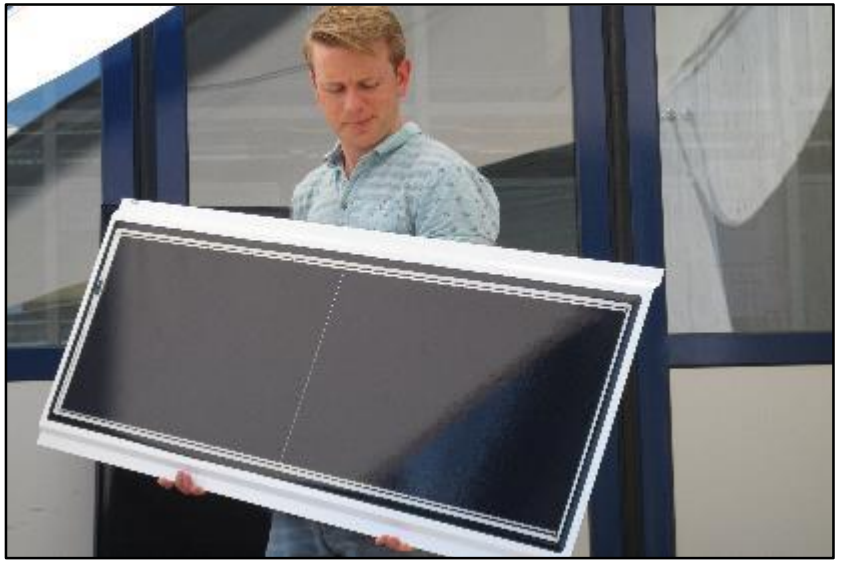

PRODUCT by MANUFACTURER
Large area PV modules, made with CIGS monolithically interconnected PV cells laminated onto a steel back sheet, designed to be attached to roof and facade industrial buildings elements.

Solar inverter by CEA
Silicon 3-phase AC grid inverter based on 12 silicon carbide MOSFET, 5kW power. MPPT system. Natural cooling. Safety components included. Communication via MODBUS. DC & AC connectors.

DEMO 4: CRICURSA

PV system 20.2 kWp

PV system description

Solar field		
System power	20.2	kWp
Orient // Inclin	+2° // 6°	(º)
Occupied area	277	m^2
No. modules	336	units
PV module		
Module power	60	Wp
Dimensions	1585 x 520	mm
Production		
Specific production	1251	kWh/kWp/ year
Estimated production	25270	kWh/year

Operation mode

Two Silicon carbide-based solar inverters of 5kW power, by CEA, are used in CRICURSA; together with two commercial SMA inverters. Electrical configuration for CRICURSA demo-site:

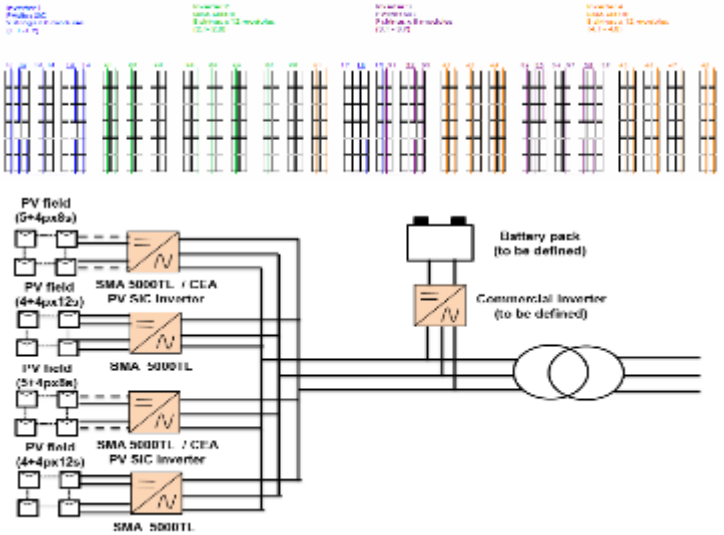

DEMO 4: CRICURSA

BIPV industrial roof

Building integration design

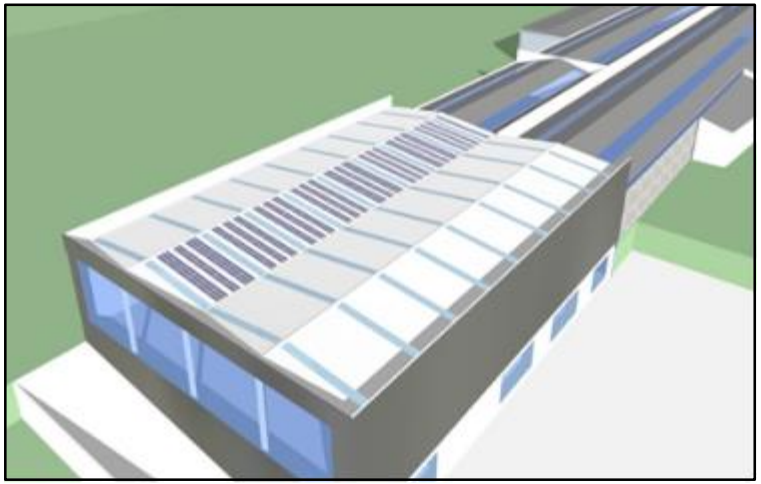

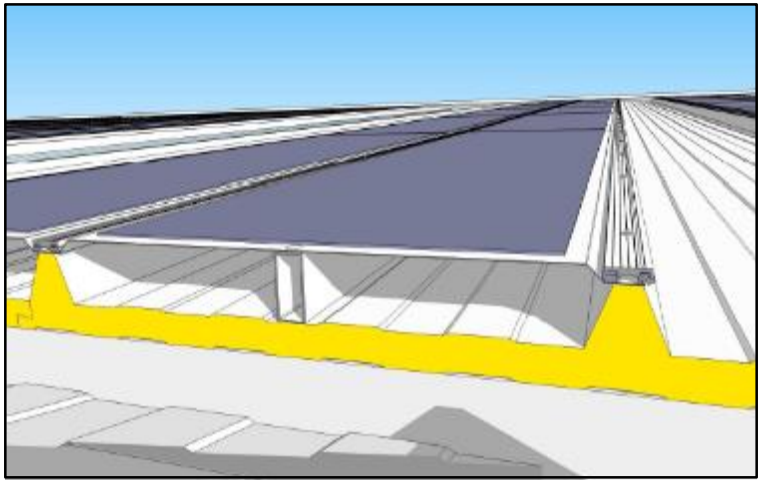

Building integration design

- The BIPV system is placed in one of the sloped roofs, south oriented and with no shadow, of a recently built pavilion.
- The new roofs are made of polyurethane panels “AIS-3G of 500 mm” and skylights.
- Geometry and materials of the BIPV modules' developed by FLISOM have been designed and chosen to perfectly match with the roof sandwich panel.
- The BIPV module is positioned above the highest point of the roof sandwich-panels. This is easier for FLISOM as the sheets can be produced, painted and bended before the cells are laminated.
- The cavity between the BIPV modules and the sandwich-panels works as an open air chamber for ventilation.

DEMO 4: CRICURSA

BIPV industrial roof

Building installation process

Installation process

- Attachment of every PV panels to the roof. The efforts dedicated to the architectural integration design brought good results on site, making easy the installation works and providing a functional and aesthetical integration.
- Installation of an outdoor general cabinet housing most BOS components and devices outdoor.
- Electrical connection of BIPV modules, inverters, batteries and a “zero-injection” device, to avoid energy surplus injection to the grid.
- A general deterioration by oxidation was observed in the PV panels after their installation. Currently, a feasible solution is being tried to be found.

DEMO 4: CRICURSA

BIPV industrial roof

Building installation result

DEMO 4: CRICURSA

BIPV industrial roof

Building installation result

DEMO 4: CRICURSA

CRICURSA BIPV industrial roof

Permitting & Commissioning

- Permitting process was relatively easy.
- All the permissions were approved by the electrical company in 2018.
- Permissions for minor works were also granted by the municipality.
- A “zero-injection” device will be used under a self-consumption without energy surplus injection regimen, according to the possibilities offered by the new Spanish regulation.
- System commissioning was carried out in the second week of July, 2019, once finished the installation works.

DEMO 4: CRICURSA

CRICURSA BIPV industrial roof

Lessons learnt

- The mechanical installation were simplified, and we use simple but special attachment for fixing external roofs, rather than use special steel profiles that were not commercial and expensive of manufacture.

- The zero-injection issue were found difficult to be accomplished. We had problems with circular toroid, and it had to be solved with a special flexible toroid much more expensive. In the other hand make these new devices work together with the CIRCUTOR CDP-0 is being not easy, although the manufacturers assure that they are compatible.

- Some minor issues as working in summer in the Mediterranean region reduce your working hours to 50%, and it causes delays, or the fact the interaction of the different inverters, SMA and VICTRON, is so delicate and must be check carefully.

DEMO 4: CRICURSA

Flisom BIPV Industrial roof

Lessons learnt

- Bending solar modules is possible without damaging the device.
- 1.5 m is an optimal size, as it can be handled by 1 person easily.
- Logistical challenges with shipping for bend forming and then to the customer abroad. Tax declaration issues even with returning empty containers.

PVSITES DEMO-SITES

DEMO 5: VILOGIA

MULTI-STOREY APARMENTS BUILDING

BIPV ventilated facade system

DEMO 5: VILOGIA

Multi-storey apartments building

Building description

Location	Wattignies (France)	**Characteristics** Residential multi-storey block built in 1975, with 48 social dwellings of different typologies, currently in a retrofitting process.
Typology	Apartments building	
Area	3639 m² (built area)	
Floors	8	

Area available for BIPV

The building is in a retrofitting process aimed to improve the building energy performance.
The double wall south façade is entirely covered with brick cladding and a vertical string of windows.
An area of 140 m² is available for BIPV, from the first floor slab to the roof.

Orientation: -16° (SSE).
Inclination: 90°.

DEMO 5: VILOGIA

Facade PV module by ONYX & Solar inverter by TECNALIA

PVSITES prototypes

Opaque ventilated façade PV module by ONYX
Fully opaque C-Si glass-glass module, 152 Wp power, with hidden bus bars and L interconnection.

Solar inverter by TECNALIA
3-phase DC-coupled PV storage inverters 10 kW power, with advanced MPPT system, battery DC current/voltage regulation, and active and reactive current AC power regulation for grid-connected operation.

DEMO 5: VILOGIA

PV system 17.0 kWp

PV system description

Solar field		
System power	17.0	kWp
Orient // Inclin	-16° // 90°	(º)
Occupied area	133	m^2
No. modules	112	units
PV module		
Module power	152	Wp
Dimensions	910 x 1280	mm
Production		
Specific production	509	kWh/kWp/ year
Estimated production	8653	kWh/year

Operation mode

Two 3-phase DC-coupled storage inverters 10kW power with advanced MPPT, battery DC current/voltage regulation, and active and reactive current AC power regulation for grid-connected operation. Electrical configuration for VILOGIA demo-site:

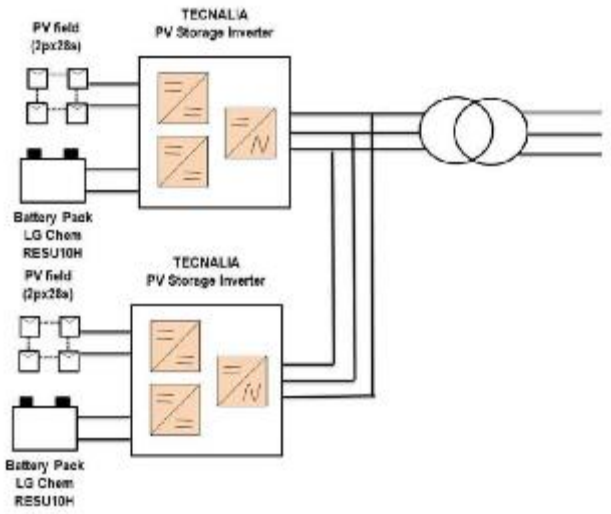

DEMO 5: VILOGIA

BIPV ventilated facade

Building integration design

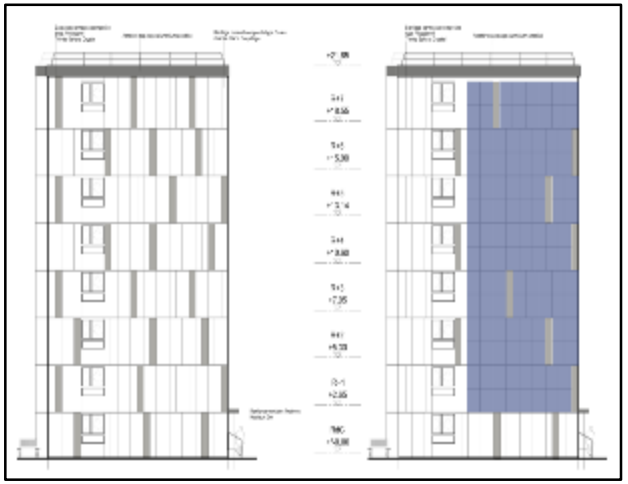

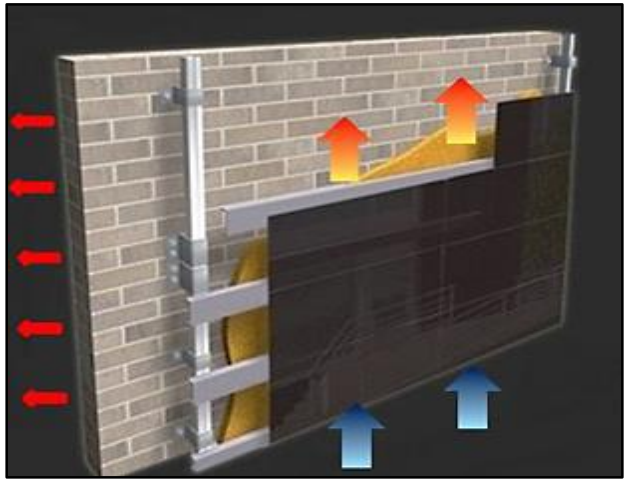

Building integration design

- Aesthetical integration according to the retrofitting architectural project.
- Integration by a conventional mounting system for ventilated façades, with a fixing system based on vertical profiles and removable fixations: aluminium/steel profiles, mechanical anchorages, shapes/staples/clips, adhesives, etc.
- The BIPV system guaranties the thermal insulation and waterproofing all along the façade: thermal insulation panels must be installed behind the BIPV modules, and joining to the boundary elements must be well executed.

DEMO 5: VILOGIA

BIPV ventilated facade

Building integration process

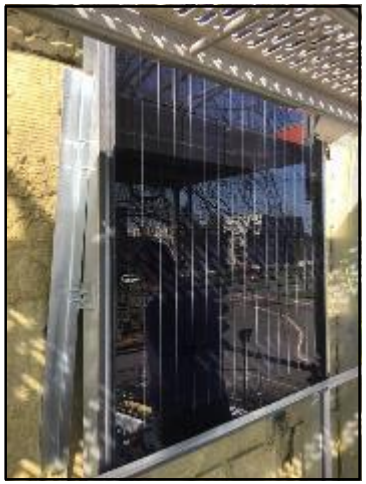

Installation process

- The SSE façade brick cladding was almost entirely removed, as part of the retrofitting, leaving the inner concrete wall exposed.
- The ventilated facade mounting system were attached to the concrete wall.
- Thermal insulation panels were installed on the concrete wall (behind the PV modules), and joining to the boundary elements were carried out.
- The BIPV modules were attached to the ventilated facade structure and connected.
- BIPV system commissioning.

DEMO 5: VILOGIA

BIPV ventilated facade

Building installation result

DEMO 5: VILOGIA

VILOGIA BIPV ventilated facade

Permitting & Commissioning

- Long and difficult municipal permitting process, due to the public housing character of the demo-building.
- Several milestones were have to be respected for the system commissioning: complete definition of the system, agreement with the electricity provider for the selling of the surplus production, appointment of a “responsible of balance” to protect the network of the variations, official certification of the complete installation by an independent control office.
- The technical room couldn’t be placed in the basement, and the common electricity meters were changed to enable the consumption data collection.
- The electricity production from the BIPV panels will be used to cover the electricity consumption for the common parts of the building. The excess of production will be sold to an electricity provider.

DEMO 5: VILOGIA

VILOGIA BIPV ventilated facade

Lessons learnt

- Replacing the brick cladding was not complicated, but it was difficult to find a company with skills in such an innovative installation.
- Due to flooding issues in the basement, the technical room was installed in the hall of one of the building's entrances, meeting other standards.
- The building integration was a real success: a great solidity against adverse weather conditions was checked.
- Authorization for using not commercial inverters and batteries was obtained, with the support of the partners and the French controlling office.
- A collective self-consumption contract was formalised for the common parts of the building, a freshly new option in France.
- Installation of a storage system for PV production composed of 2 batteries was one of the innovations brought by Vilogia with this project.
- Wide and deep new knowledge and competences were gained by VILOGIA about BIPV, useful to be applied in future similar projects.
- Collaboration with partners and EU team, which help to understand barriers and to solve them, was essential for the final sucess of project.

PVSITES DEMO-SITES

DEMO 6: TECNALIA

OFFICE BUILDING

BIPV ventilated facade system

DEMO 6: TECNALIA

Office building

Building description

Location	San Sebastian (Spain)
Typology	Office building
Area	-
Floors	4

Characteristics

TECNALIA office building with laboratories. The most suitable zone for BIPV are the offices zone located in the 2nd and 3rd floors.

Area available for BIPV

Polygonal section façade with a glass cladding. The irregular geometry of the facades requires a special design effort to carry out the architectural integration, as well as a well conceived electrical connecting strategy.

Orientation:
(-1° to +4)° (S) & (-31° to -36° (SE)
Inclination: 90°.

DEMO 6: TECNALIA

Transparent ventilated facade PV module by ONYX

PVSITES prototypes

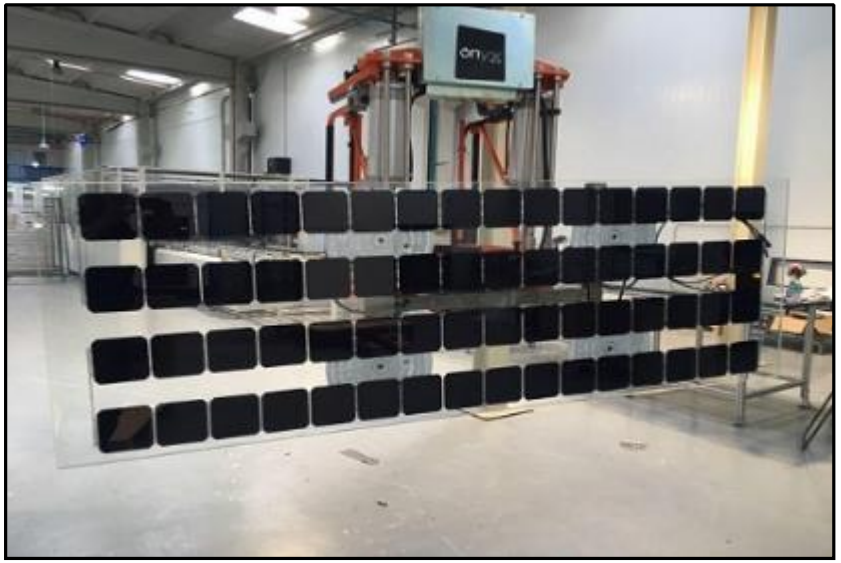

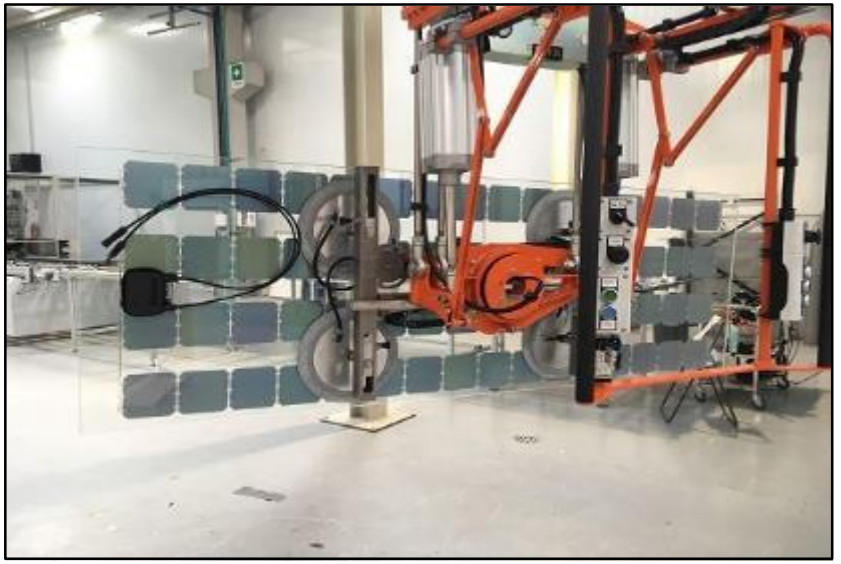

Back-contact C-Si cells transparent ventilated facade module by ONYX

BIPV glass-glass module based on back-contact c-Si cells technology, for semi-transparent curtain walls and ventilated facades applications: 191.5 Wp power, 61% active area, and 39% transparency.
Cells are joined by specific tabs of back contact solar cells, creating a junction where the stresses are absorbed by the interconnector and increasing the PV active area.

DEMO 6: TECNALIA

PV system 18.4 kWp

PV system description

Solar field		
System power	18.4	kWp
Orient // Inclin	Several // 90°	(º)
Occupied area	163	m^2
No. modules	48 + 48 = 96	units
PV module (Model 1 & Model 2)		
Module power	192	Wp
Dimensions	2.250 x 760 2.212 x 765	mm
Production		
Specific production	655	kWh/kWp/ year
Estimated production	12052	kWh/year

Operation mode

Commercial inverters are used for the energy conditioning. All the equipment will be placed together in order to reduce electrical losses and facilitate the maintenance labours. The system are connected to the grid in a self-consumption regime without storage. Electrical scheme at TECNALIA demo-site:

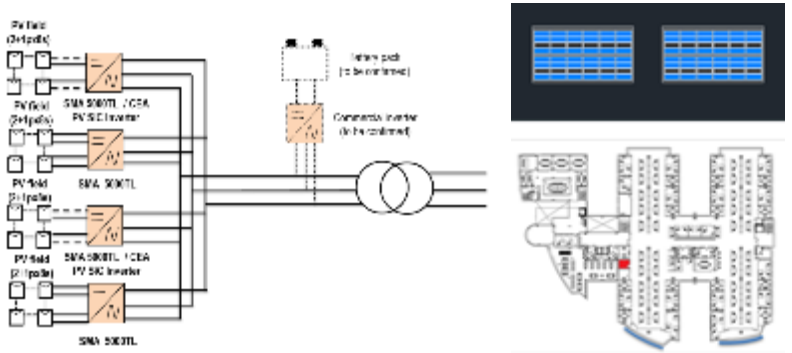

DEMO 6: TECNALIA

BIPV ventilated facade

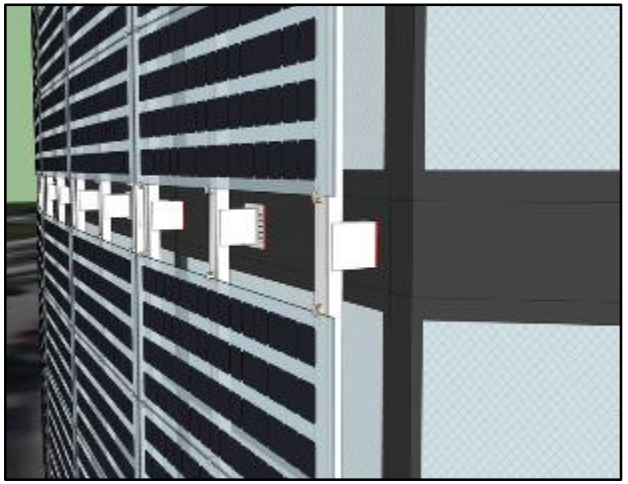

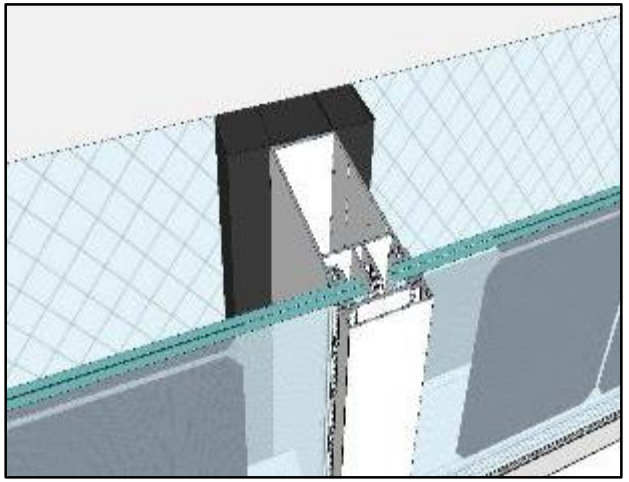

Building integration design

- The BIPV systems works as a ventilated facade, since the original curtain walls were not removed.
- The geometrical design of the BIPV systems reproduces the existing curtain walls' one.
- A ventilated facade mounting system, by HILTI, has been used to install the modules.
- In order to maximise the ventilation of the PV modules, wide brackets were used to leave behind them a ventilated cavity of about 25 cm.
- The vertical profiles and clips are anodized in black in order to match the colour of the solar cells and improve the aesthetical solution.

DEMO 6: TECNALIA

BIPV ventilated facade

Building integration process

Installation process

- Preliminary architectural design carried out by BEAR.
- A final design is selected by TECNALIA.
- TECNALIA contacts HILTI, which proposes a solution based on the original idea but in compliance with CTE (mechanical calculation).
- The faceted surface of the facade avoids to share the vertical profile between modules in the same row: it is necessary to duplicate this profile and to include a central vertical profile. This measure increases the final costs, although it is a unique project due to the characteristics of the facade.
- TECNALIA contacts SB Fixings for the clip, and Bikain and Bikote to install the substructure and the modules.
- TECNALIA subcontracts ENAR to evaluate the solution prior to the beginning of the works.

DEMO 6: TECNALIA

BIPV ventilated facade

Building integration process

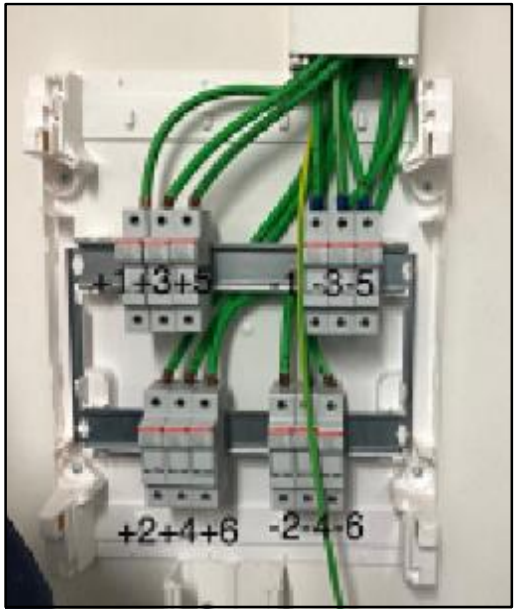

DEMO 6: TECNALIA

Office building

Building installation result

DEMO 6: TECNALIA

Office building

Building installation result

DEMO 6: TECNALIA

BIPV ventilated facade

Building installation result

DEMO 6: TECNALIA

TECNALIA BIPV ventilated facade

Permitting & Commissioning

- The construction license, which required presentation of a project endorsed by the architecture school, was approved by the municipality 2 months after the submission of the documentation.

- The permitting process for the legalization of the PV installation licence required the approval of the local electricity distributor. An adaptation of the original technical solution was required due to the new self-consumption Spanish regulation.

- The systems works under the self-consumption modality: ‘PV installation without energy surplus’. A ‘zero-injection’ kit was installed for this purpose.

DEMO 6: TECNALIA

TECNALIA BIPV ventilated facade

Lessons learnt

- Importance of defining a specific engineering, which oversees the entire project from the beginning: project management.
- To define the roles of the agents involved (architect, engineering, installer, supplier, etc.) so that all functions are covered (project management, permitting, purchases, health and safety coordination, installation, network connection, etc.) and to collaborate between them from the design phase.
- It is advisable, as far as possible, only 1 supplier (e.g: structure + fixings).

WP8 Current status

PVsites

www.pvsites.eu