PVSITES TRAINING SESSIONS

DEMO 1 : SINGLE FAMILY HOUSE

SOLAR ROOF

STAMBUGES, 26TH NOVEMBER 2019

Dominique Deramaix
Bureau d'Architectes FORMAT D² sprl

This project has received funding from the European Union's Horizon 2020 research and innovation programme under grant agreement N° 691768

DEMO 1: FormatD2

Format D2 BIPV solar roof

Video

DEMO 1: FormatD2

Single family house

Building description

Location	Stambruges (Belgium)
Typology	Residential & office
Area	280 m² (219 m² heated floor)
Floors	3

Characteristics
New construction. Detached passive wooden house, located in a rural area, with residential and professional uses (architectural office).

Area available for BIPV
Single 30° sloped roof. Available area of 107 m² for implementing BIPV systems. Small shadows caused by a chimney. Optimum orientation and inclination with maximum production guarantied.
Orientation: +14° (NNW).
Inclination: 30°.

PVsites
www.pvsites.eu

DEMO 1: FormatD2

BIPV roof tile by FLISOM & Solar inverter by TECNALIA

PVSITES prototypes

BIPV tile by FLISOM
Semi-flexible and lightweight CIGS PV element to be directly assembled to each other. Series connectivity enable to be carried out during the installation works, with hidden connection boxes and cables not disturbing fastening.

Solar inverter by TECNALIA
3-phase DC-coupled PV storage inverter 10 kW power, with advanced MPPT system, battery DC current/voltage regulation, and active and reactive current AC power regulation for grid-connected operation.

DEMO 1: FormatD2

PV system 7.0 kWp

PV system description

Solar field		
System power	8.7	kWp
Orient // Inclin	+14° // 30°	(º)
Occupied area	100	m^2
No. modules	136	units
PV module		
Module power	64	Wp
Dimensions	465 x 1575	mm
Production		
Specific production	864	kWh/kWp/ year
Estimated production	7517	kWh/year

Operation mode

Different operational possibilities, by means of both storing the energy produced and injecting it in the grid.

Electrical configuration for FD2 demo site:

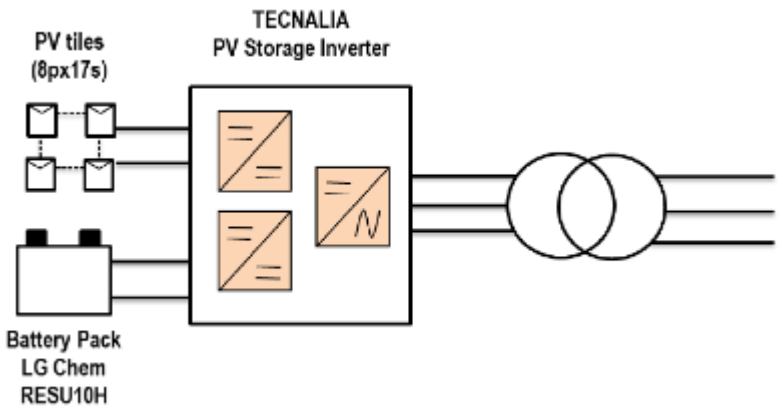

DEMO 1: FormatD2

BIPV solar roof

Building integration design

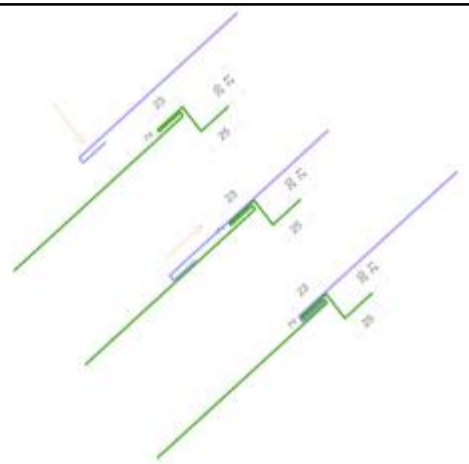

Building integration design

- Size and shape: module dimensions chosen to guaranty a high aesthetical quality and make easy installation. and connection works.
- Joints and fixings: minimizing of joints and non-visible fixings for a better aesthetical quality, by means of the interlocking system for the assembly of the tiles each other: the bottom of the upper module connects with the top of the lower module by sliding the module up.
- Visual appearance: colour and material are close or compatible to those used in the building.
- Roof edges and rims: specially cared finishing for functional and aesthetical reasons.

PVsites
www.pvsites.eu

DEMO 1: FormatD2

Format D2 BIPV solar roof

Video CAD

DEMO 1: FormatD2

Format D2 BIPV solar roof

Mounting : 7 days

DEMO 1: FormatD2

BIPV solar roof

Building installation process

Installation process

- Taking off the tiles provisionally installed.
- Placing of a new underroof resisting more than 100 °C in case of overheating under the panels.
- Placing of the vertical an horizontal lathing, which allow ventilation in the higher air gap.
- Calculation and the previous placement of all the elements needed to install the tiles.
- Interconnection and installation of PV tiles and compressive bands on several finishing elements. Only 2 days were necessary to place the PV tiles.
- Strings connections and protections installation.

DEMO 1: FormatD2

Format D2 BIPV solar roof

Photovoltaic tiles

	Box Nr: 295								
	Module Name	**IVPmpp**	**IVVoc**	**IVIsc**	**IVVmpp**	**IVImpp**	**IVRshDark0**		
1	MOD-19091-121	59.83	47.78	2.05	34.64	1.73	1 418.82	55.00	Wp
2	MOD-19091-122	57.77	47.31	2.05	34.12	1.69	1 011.65	55.00	Wp
3	MOD-19091-124	59.21	47.59	2.05	34.53	1.72	1 209.11	55.00	
4	MOD-19091-127	60.09	47.89	2.05	34.83	1.73	1 266.82	60.00	
5	MOD-19091-129	59.24	47.31	2.06	34.29	1.73	1 363.14	55.00	
6	MOD-19091-131	60.09	47.82	2.06	34.78	1.73	1 214.22	60.00	
7	MOD-19091-132	59.40	47.24	2.06	34.36	1.73	1 177.66	55.00	
8	MOD-19091-368	62.72	49.04	2.10	36.07	1.74	453.40	60.00	
9	MOD-19091-369	64.07	49.33	2.11	36.27	1.77	680.67	60.00	
10	MOD-19091-371	65.02	49.53	2.11	36.56	1.78	661.09	65.00	
11	MOD-19091-484	59.27	48.45	2.08	35.26	1.68	512.14	55.00	
12	MOD-19091-485	59.74	48.72	2.08	35.63	1.68	583.59	55.00	
13	MOD-19091-486	61.48	48.96	2.08	36.02	1.71	538.71	60.00	
14	MOD-19091-490	64.02	49.23	2.07	36.37	1.76	1 141.93	60.00	
15	MOD-19091-491	63.50	48.99	2.08	36.22	1.75	943.52	60.00	
16	MOD-19091-493	63.30	48.72	2.08	35.91	1.76	931.97	60.00	
17	MOD-19105-117	62.39	48.92	2.08	36.31	1.72	629.13	60.00	
18	MOD-19105-147	63.45	49.28	2.08	36.29	1.75	826.56	60.00	
19	MOD-19105-149	62.45	49.09	2.07	36.10	1.73	675.71	60.00	
20	MOD-19105-164	62.41	49.72	2.07	36.57	1.71	687.02	60.00	
21	MOD-19125-103	55.69	47.40	2.11	32.32	1.72	918.65	55.00	
22	MOD-19125-104	54.46	47.01	2.10	31.79	1.71	996.87	50.00	
23	MOD-19125-105	55.97	47.70	2.12	32.36	1.73	908.33	55.00	
24	MOD-19125-106	56.92	47.78	2.14	32.59	1.75	1 016.77	55.00	
25	MOD-19125-108	59.18	47.60	2.12	33.52	1.77	1 215.15	55.00	
26	MOD-19125-110	57.87	47.62	2.11	33.55	1.73	775.30	55.00	
27	MOD-19125-131	60.93	48.53	2.07	35.45	1.72	782.73	60.00	
28	MOD-19125-137	60.73	48.15	2.09	34.86	1.74	908.47	60.00	
29	MOD-19125-139	58.34	48.31	2.14	33.28	1.75	1 028.19	55.00	
30	MOD-19125-160	61.43	48.63	2.05	36.09	1.70	610.03	60.00	

DIFFERENT CHOICES FOR CONNECTION FOR STRINGS

Différents choix pour la connection des tuiles par réseau

Strings in //	**8**		**9**			**10**	
Tiles in serial	**18**		**16**			**14**	
Total tiles	**144**		**144**			**(4 off) 140**	
Total Max Volt (serial)	**854**		**759**			**664**	**High**
Total Max A (//)	**16**		**19**			**21**	**> 20A**

9 STRINGS of 16 tiles

144 tiles

Average voltage/tile	47.44 V	=>	758.96	V total
Average amperage/tile	2.06 A	=>	18.55	A total
Average Wp/tile	56.88 Wp	=>	8.19	kWpeak

DEMO 1: FormatD2

Format D2 BIPV solar roof

Photovoltaic tiles

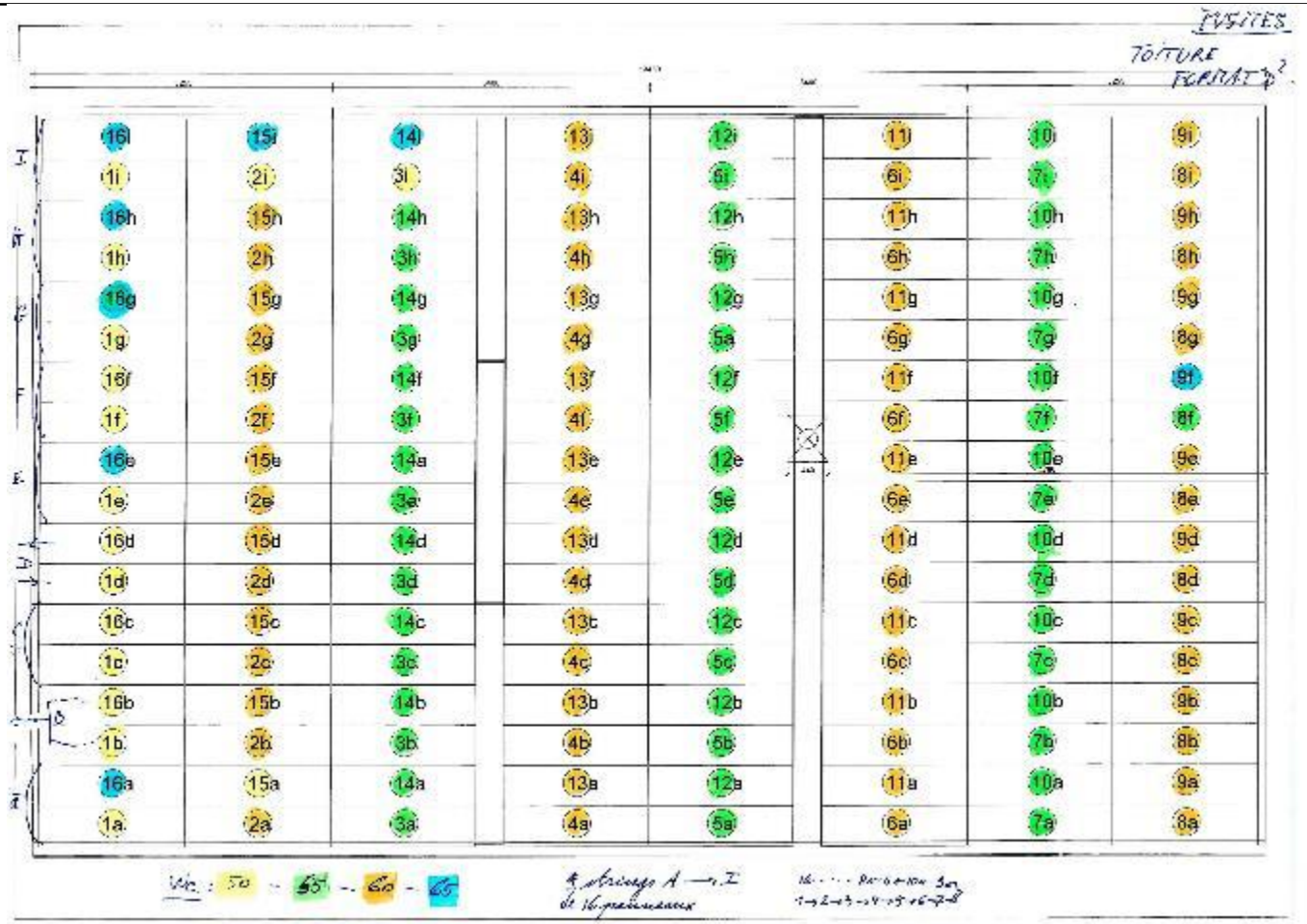

DEMO 1: FormatD2

Format D2 BIPV solar roof

Power

POWER DISTRIBUTION BY STRINGS
REPARTITION PUISSANCE PAR STRINGS

A	2	50	100		**F**	2	50	100	
	6	55	330			7	55	385	
	7	60	420			6	60	360	
	1	65	65			1	65	65	
	16		**915**	**Wc**		**16**		**910**	**Wc**
B	2	50	100		**G**	1	50	50	
	6	55	330			6	55	330	
	8	60	480			8	60	480	
	0	65	0			1	65	65	
	16		**910**	**Wc**		**16**		**925**	**Wc**
C	2	50	100		**H**	1	50	50	
	6	55	330			6	55	330	
	8	60	480			8	60	480	
	0	65	0			1	65	65	
	16		**910**	**Wc**		**16**		**925**	**Wc**
D	2	50	100		**I**	3	50	150	
	6	55	330			4	55	220	
	8	60	480			6	60	360	
	0	65	0			3	65	195	
	16		**910**	**Wc**		**16**		**925**	**Wc**
E	1	50	50		**TOTAL**			**8255**	**Wc**
	6	55	330						
	8	60	480						
	1	65	65						
	16		**925**	**Wc**					

PVsites
www.pvsites.eu

DEMO 1: FormatD2

Format D2 BIPV solar roof

Temperature sensors

Temperature sensors :
Bottom and Top of the roof
* underroof layer
* airgap
* back of the tile

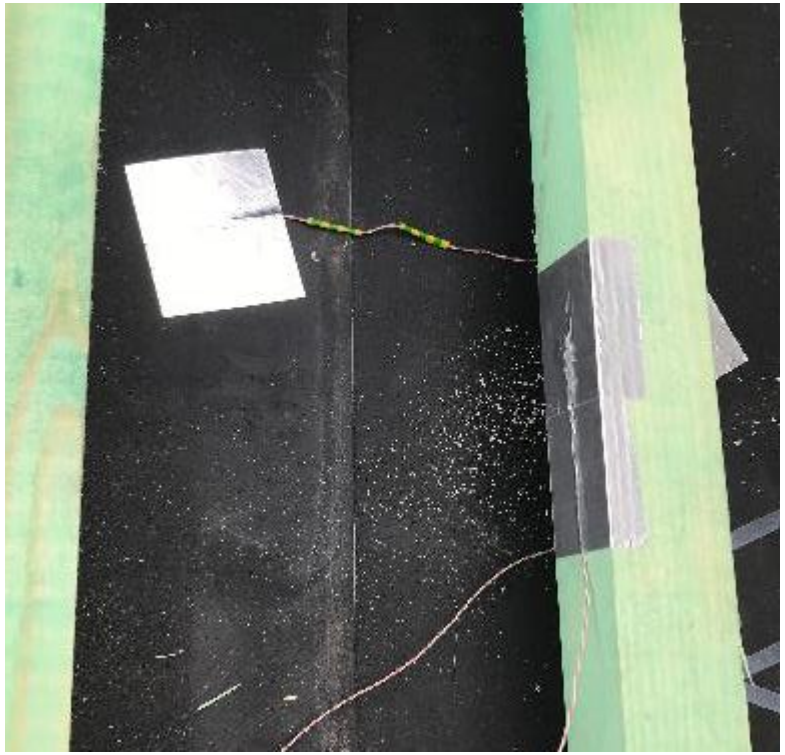

DEMO 1: FormatD2

Format D2 BIPV solar roof

Temperature

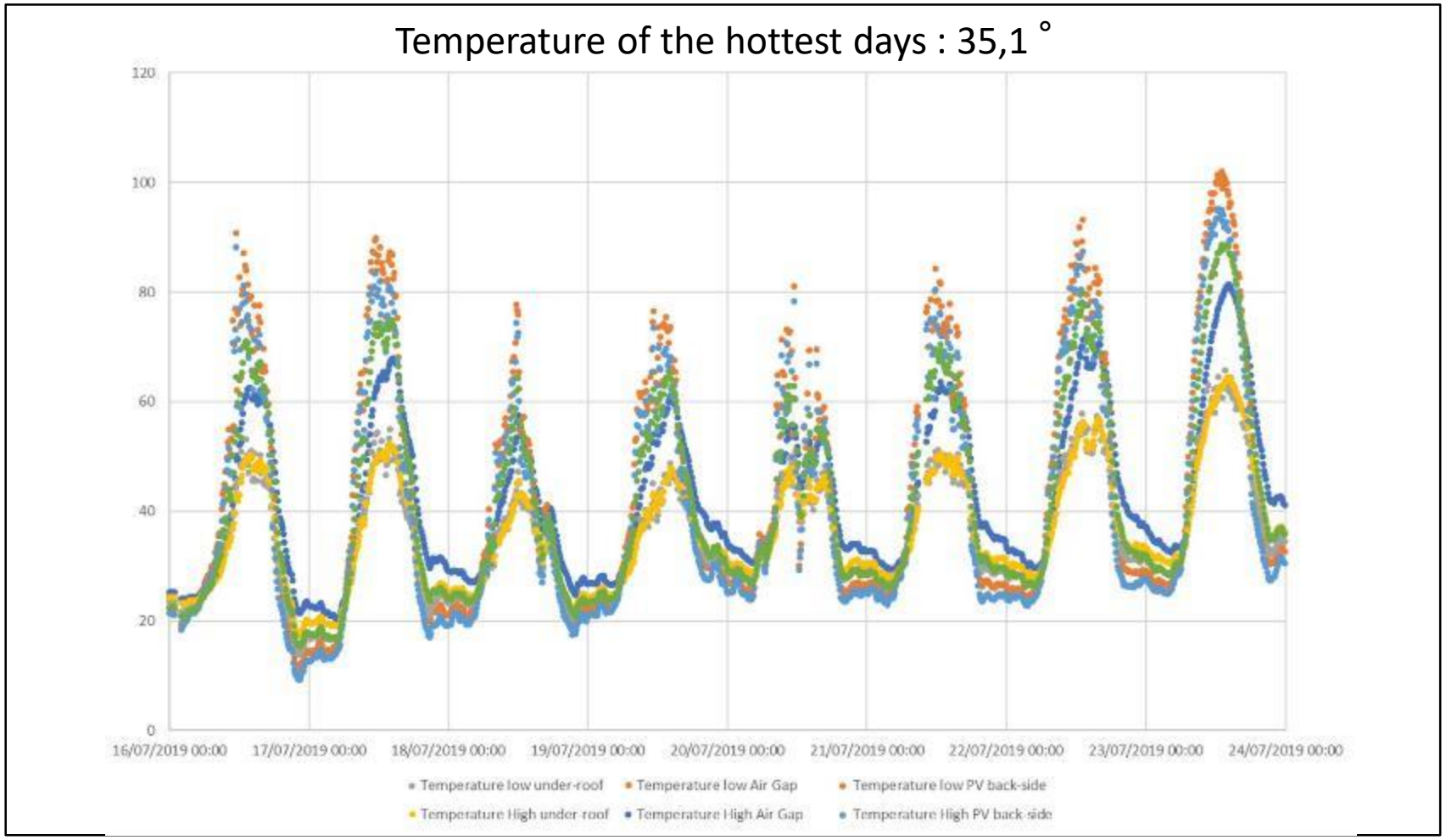

DEMO 1: FormatD2

BIPV solar roof

Building installation result

DEMO 1: FormatD2

BIPV solar roof

Building installation result

DEMO 1: FormatD2

FormatD2 BIPV solar roof

Permitting & Commissioning

- Permitting process was relatively easy, with short deadlines. Special aesthetic characteristics were required to get the construction allowance of the municipality. 35 calendar days were needed to have the agreement.
- Finally, commissioning was executed as planned and on time. A storage system and a solar inverter by TECNALIA were installed.
- The use of the non-commercial inverter was accepted by the grid manager, by means of a special agreement. Once established all connections, the installation must be controlled by an accredited body.
- Injection to the grid is currently permitted without being sold the surplus (balance production/consumption) but from the 1st of January 2020, a tax for the kW reinjected into the grid must be paid.

DEMO 1: FormatD2

FormatD2 BIPV solar roof

Lessons learned

- When mounting, lost time to balance the power of the strings due to difference of tiles power (50W, 55W, 60W, 65W).
- Difference of colour between the cigs film on tiles (not due to difference of power) blue and black.
- Lost time to open the upper folding of the tile to permit assembly; lots of details to finish perfectly the roof.
- Placement of the electrical connector under the tile (not enough spacing to the edges).
- The metallic sheet of the tile is a little too narrow; some deformation and ripple was observed.
- Not enough possibilities to adjust the height of assembly of tiles.

DEMO 1: FormatD2

Format D2 BIPV solar roof

Lessons learned

DEMO 1: FormatD2

Format D2 BIPV solar roof

Lessons learned

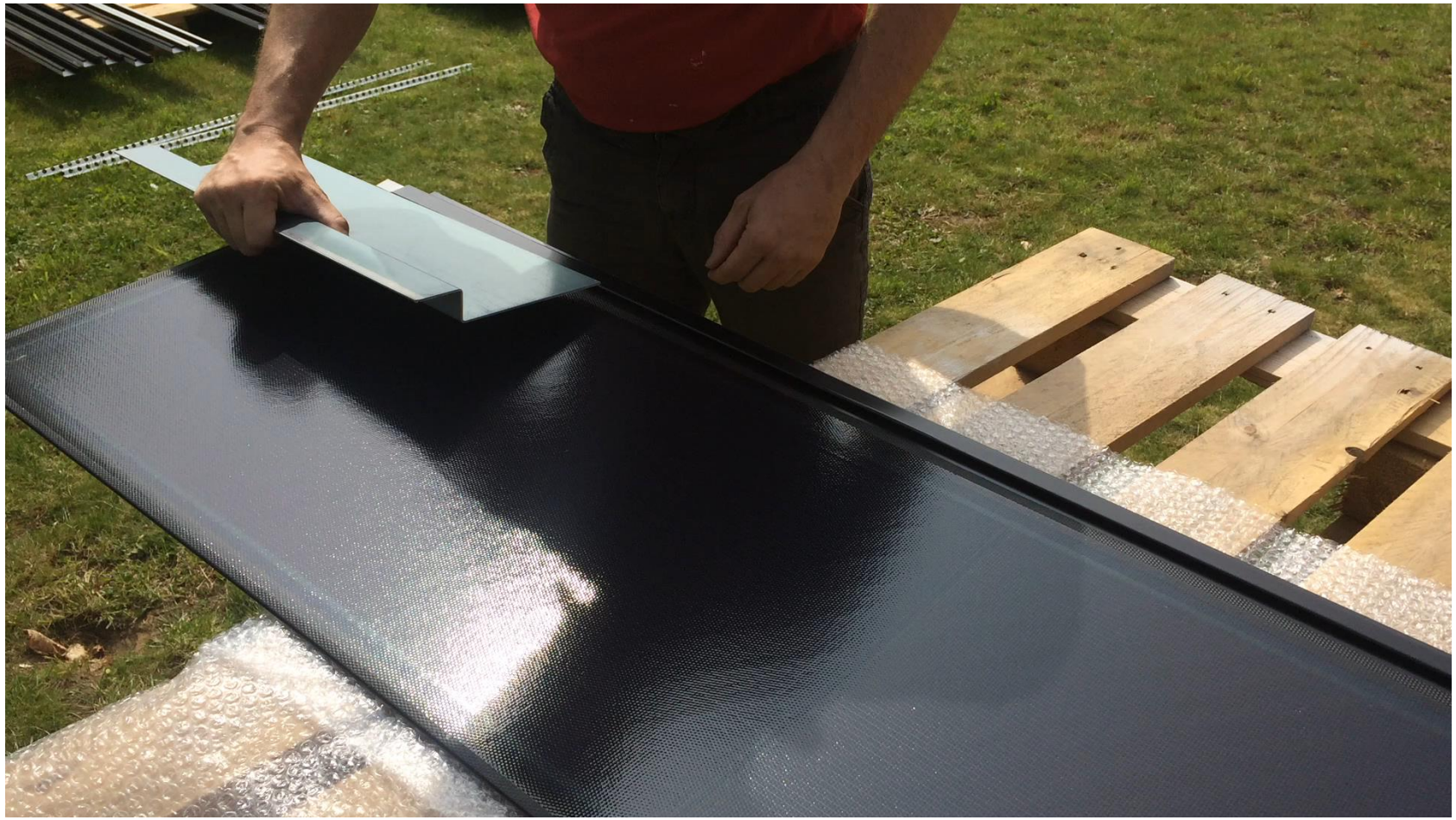

DEMO 1: FormatD2

Format D2 BIPV solar roof

Lessons learned

DEMO 1: FormatD2

Flisom BIPV solar roof

Lessons learned

- Only 1 out of 10 painted steel products is suitable for BIPV. The solar norm of 1000 h 85° C at 85% relative humidity is to harsh for most painted steel substrates.
- Solar on steel is difficult with junction box on the backside. Insulation of feed through is not trivial.
- PVDF coated steel finally passed the test.

PVsites

www.pvsites.eu

PVsites
www.pvsites.eu